GENERAL SOIL EROSION AND SEDIMENTATION CONTROL NOTES

THE FOLLOWING ITEMS ARE INTENDED TO BE A GUIDE TO THE CONTRACTOR IN EVALUATING SOIL EROSION PREVENTION REQUIREMENTS FOR THE PROJECT. SPECIFIC SOIL EROSION PREVENTION DEVICES AND LOCATIONS ARE DETAILED ON THE PLANS. THE CONTRACTOR SHOULD ALSO NOTE THAT SOIL EROSION AND SEDIMENTATION CONTROLS ARE INCIDENTAL TO THE PROJECT UNLESS SPECIFIED OTHERWISE ON THE PLANS OR IN THE SPECIFICATIONS.

1. ALL EROSION AND SEDIMENT CONTROL WORK SHALL CONFORM TO THE PERMIT REQUIREMENTS AND THE STANDARDS AND SPECIFICATIONS OF THE CITY OF TROY.
2. DAILY INSPECTIONS SHALL BE MADE BY THE CONTRACTOR FOR EFFECTIVENESS OF EROSION AND SEDIMENTATION CONTROL MEASURES AND ANY NECESSARY REPAIRS SHALL BE PERFORMED WITHOUT DELAY.
3. EROSION AND ANY SEDIMENTATION FROM WORK ON THIS SITE SHALL BE CONTAINED ON THE SITE AND NOT ALLOWED TO COLLECT ON ANY OFF-SITE AREAS OR IN WATERWAYS.

   WATERWAYS INCLUDE NATURAL AND MAN-MADE OPEN DITCHES, STREAMS, STORM DRAINS, LAKES AND PONDS.
4. CONTRACTOR SHALL APPLY TEMPORARY EROSION AND SEDIMENTATION CONTROL MEASURES WHEN REQUIRED AND AS DIRECTED ON THESE PLANS. CONTRACTOR SHALL REMOVE TEMPORARY MEASURES AS SOON AS PERMANENT STABILIZATION OF SLOPES, DITCHES, AND OTHER EARTH CHANGES HAS BEEN ACCOMPLISHED.
5. STAGING THE WORK WILL BE DONE BY THE CONTRACTOR AS INDICATED ON THE SOIL EROSION PLANS AND AS REQUIRED TO ENSURE PROGRESSIVE STABILIZATION OF DISTURBED EARTH.
6. THE CONTRACTOR WILL ESTABLISH SOIL EROSION PREVENTION PRACTICES IN THE EARLY STAGES OF CONSTRUCTION. SEDIMENT CONTROL PRACTICES WILL BE APPLIED AS A PERIMETER DEFENSE AGAINST ANY TRANSPORTING OF SILT OFF THE SITE.
7. ENGINEER AND OWNER CERTIFICATION MUST BE INCLUDED ON THE PLANS.
8. SEPARATE SHEETS SHOWING EROSION PREVENTION AND SEDIMENTATION CONTROL PLANS MUST BE PROVIDED.
9. THE FOLLOWING GUIDELINES ARE TO BE IMPLEMENTED:

   A. CHECK DAMS
   - STONE SIZE MUST BE INCREASED WITH INCREASED SLOPE AND VELOCITY.
   - SIDE SLOPE OF THE DAM SHOULD BE 2:1 OR FLATTER.
   - STRAW BALES ARE NOT TO BE USED FOR CHECK DAMS.
   - ADD STONES AS NEEDED TO MAINTAIN DESIGN HEIGHT AND CROSS SECTION.
   - ANY ACCUMULATION OF SEDIMENT SHALL BE REMOVED AND STOCKPILED IN A STABILIZED AREA TO PREVENT THE MATERIAL FROM ERODING BACK INTO THE DRAINAGE COURSE.

   B. VEGETATIVE BUFFER ZONES
   - VEGETATION MUST BE MAINTAINED IN A VIGOROUS CONDITION.
   - RESHAPE AND RESEED AREAS WHERE CONCENTRATED FLOW OCCURS OR VEGETATION FAILS.
   - TO BE USED FOR SHEET FLOWS ONLY.
   - NOT TO BE USED AS A ROADWAY.

   C. SILT FENCE
   - MUST BE INSTALLED ALONG THE CONTOUR LINE.
   - IS NOT TO BE USED IN AREAS OF CONCENTRATED FLOW.
   - MUST BE TRENCHED AT LEAST 6 INCHES AND BACKFILLED.
   - MULTIPLE ROWS ARE TO BE USED UP A SLOPE.
   - ACCUMULATED SEDIMENT MUST BE PERIODICALLY REMOVED.
   - WHERE NECESSARY, A SUPPORT FENCE SHALL BE USED TO SUPPORT THE GEOTEXTILE FILTER FABRIC.
   - TO BE REMOVED AFTER SITE IS PERMANENTLY STABILIZED.

   D. INLET SEDIMENT TRAP
   - THE SEDIMENT DEPOSITION AREA AND NONWOVEN GEOTEXTILE FILTER FABRIC SHOULD BE CLEANED OF ALL ACCUMULATED SEDIMENT AFTER EACH STORM.
   - AFTER ALL CONTRIBUTING AREAS ARE STABILIZED, THE FILTER FABRIC WILL BE REMOVED, SEDIMENT DEPOSITION AREA FILLED, AND A SOD INLET FILTER PLACED OVER THE DISRUPTED LAWN AREA.
   - THE FILTER MATERIAL USED TO BACKFILL PARKING LOT DRAINAGE HOLES WILL BE PEASTONE. THE SIDE EXCAVATION FOR THE PLACEMENT OF THIS MATERIAL WILL NOT BE DEEPER THAN THE INVERT OF THE DRAINAGE HOLES

   E. INLET FILTERS AFTER PAVING OR GRADING
   - INLET FILTERS WILL REMAIN IN PLACE UNTIL ALL DENUDED AREAS CONTRIBUTING TO THEM ARE STABILIZED WITH VEGETATION.
   - PERIODIC INSPECTION AND MAINTENANCE WILL BE PROVIDED TO INSURE THAT FILTERS ARE FUNCTIONING PROPERLY

   F. SOD INLET FILTER
   - SOD INLET FILTERS WILL ONLY BE USED TO HANDLE LIGHT CONCENTRATIONS OF SEDIMENT.
   - RECOMMENDED FOR USE AFTER FINAL GRADING IS COMPLETE AND DURING THE ESTABLISHMENT OF A VEGETATIVE COVER.
   - CATCH BASIN INLET COVERS MAY BE WRAPPED IN A NON-WOVEN GEOTEXTILE FILTER FABRIC FOR ADDITIONAL FILTRATION.
   - PERIODIC INSPECTION AND MAINTENANCE MUST BE PROVIDED TO INSURE EFFICIENT OPERATION.

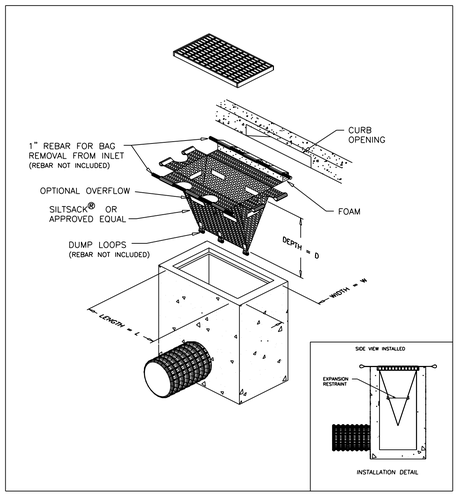

INLET FILTERS AFTER PAVING OR GRADING

THE GRAPH LISTED BELOW IS USED TO DETERMINE THE ADEQUACY OF AN EXISTING VEGETATIVE BUFFER ZONE FOR USE AS A SEDIMENT FILTER. THIS GRAPH IS ONLY APPLICABLE IF THE VEGETATION IS A DENSE WELL-GROWN STAND OF GROUND COVER. AT LEAST 4" IN HEIGHT. AN AREA COVERED WITH BUSHES AND TREES WITHOUT A GOOD GROUND COVER IS NOT ACCEPTABLE.

EXAMPLE

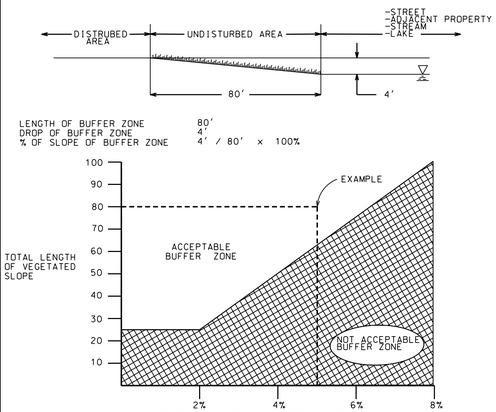

VEGETATIVE BUFFER ZONE

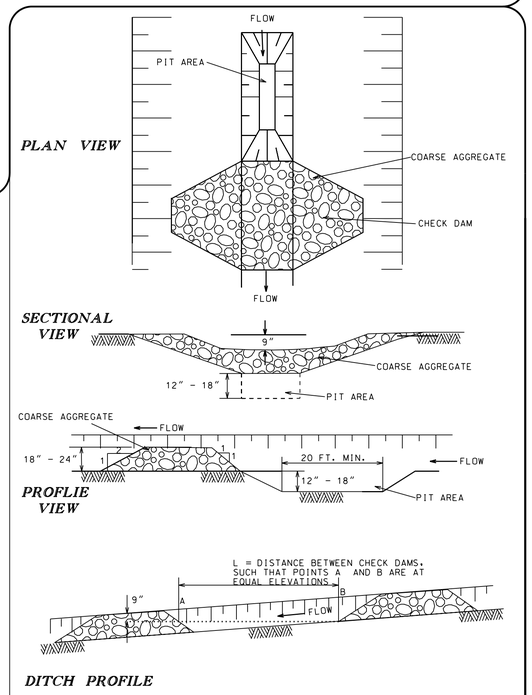

SEDIMENT TRAP WITH CHECK DAM

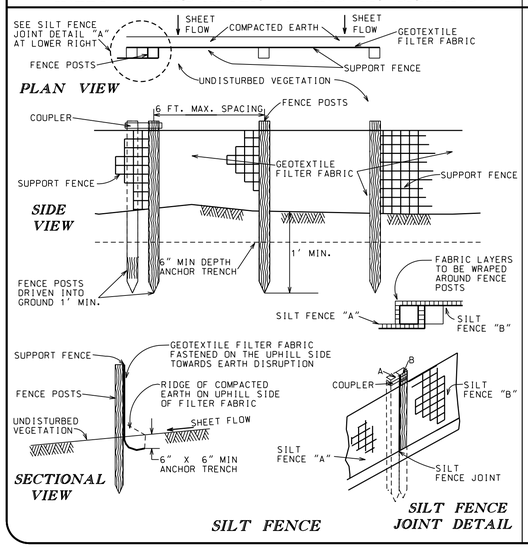

SILT FENCE

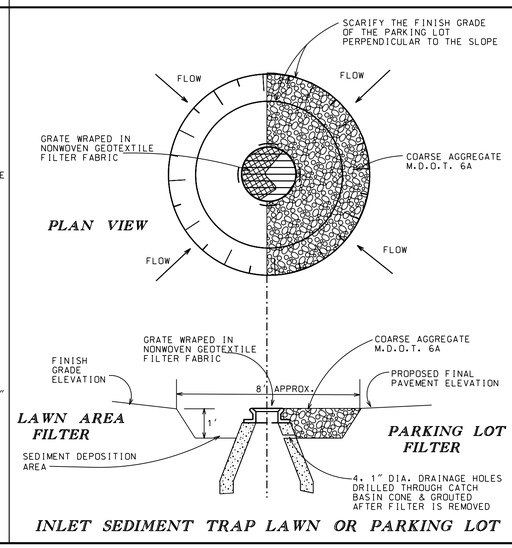

INLET SEDIMENT TRAP LAWN OR PARKING LOT

DEFINITION	SOD INLET FILTER ARE PADS OF SOD PLACED AROUND A STORM DRAIN INLET OR CATCH BASIN.
PURPOSE	SOD INLET FILTERS ARE INSTALLED TO SLOW THE FLOW OF WATER INTO AN INLET OR CACTCH BASIN AND TO FILTER OUT APPRECIABLE AMOUNTS OF SEDIMENT IN THE PROCESS.
WHERE APPLICABLE	SOD INLET FILTERS SHOULD ONLY BE USED TO HANDLE LIGHT CONCENTRATIONS OF SEDIMENT. THEY ARE BEST USED AFTER FINAL GRADING IS COMPLETED AND DURING THE ESTABLISHMENT OF A VEGETATIVE COVER.

NOTE:
MINIMUM SIZE SHALL BE 20 FT. X 20 FT.

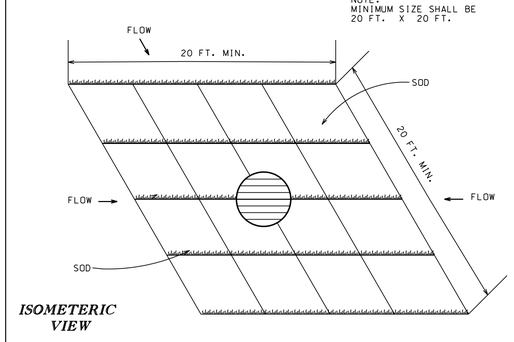

SOD INLET FILTER

GENERAL CONSTRUCTION NOTES

THE FOLLOWING ITEMS OF WORK RELATED TO THE PROPOSED CONSTRUCTION ARE INTENDED TO ACT AS A GUIDE TO THE CONTRACTOR IN EVALUATING THE REQUIREMENTS FOR THE PROJECT. HOWEVER. THE CONTRACTOR IS RESPONSIBLE TO INSPECT THE PROJECT IN THE FIELD AND MAKE A DETERMINATION OF THE ITEMS OF WORK NECESSARY TO COMPLETE THE PROJECT. THE CONTRACTOR SHALL SPECIFICALLY DIRECT HIS ATTENTION TO THE EXTENT OF INCIDENTAL CONTRACT ITEMS. OR WORK IDENTIFIED AS BEING INCLUDED IN OTHER ESTABLISHED PAY ITEMS AND INCLUDE THIS WORK IN HIS BID PRICE.

1. THE CONTRACTOR SHALL NOTIFY THE CITY OF TROY AT (248) 524-3409 THREE (3) WORKING DAYS PRIOR TO CONSTRUCTION.
2. ALL WATER MAIN AND SANITARY SEWER CONSTRUCTION SHALL CONFORM TO THE CURRENT STANDARDS AND CITY OF TROY SPECIFICATIONS AND THE DETROIT WATER AND SEWERAGE DEPARTMENTS.
3. ROAD COMMISSION FOR OAKLAND COUNTY (RCOC) PERMITS:

   ALL ROAD CROSSINGS AND RELATED WORK IN THE COUNTY RIGHT-OF-WAYS SHALL BE PERFORMED UNDER THE SUPERVISION AND INSPECTION OF THE RCOC. ALL PERMITS SHALL BE OBTAINED BY THE CONTRACTOR. AND ALL PERMIT AND INSPECTION FEES SHALL BE PAID FOR BY THE CONTRACTOR (INCLUDED IN THE COST OF THE IMPROVEMENT). ROAD PATCHES SHALL BE AS SPECIFIED BY THE RCOC. AND ALL REMOVALS SHALL BE SAWCUT FULL DEPTH. TRAFFIC FOR ALL LOCAL RESIDENTS AND EMERGENCY VEHICLES MUST BE MAINTAINED AT ALL TIMES.
4. OAKLAND COUNTY DEPT. OF PUBLIC WORKS (OCDPW) PERMITS:

   ALL DRAIN CROSSINGS AND RELATED WORK IN THE COUNTRY DRAIN RIGHT-OF-WAY AND/OR ITS EASEMENTS SHALL BE PERFORMED UNDER THE SUPERVISION AND INSPECTION OF THE OCDPW. ALL PERMITS SHALL BE OBTAINED BY THE CONTRACTOR. AND ALL PERMIT AND INSPECTION FEES SHALL BE PAID FOR BY THE CONTRACTOR (INCLUDED IN THE COST OF THE IMPROVEMENT).

   THE CONTRACTOR SHALL CONTACT THE OFFICE OF THE OCDPW 48 HOURS PRIOR TO CONSTRUCTION.
5. PRIOR TO ANY EXCAVATION. THE CONTRACTOR SHALL TELEPHONE MISS DIG (1-800-482-7171) FOR THE LOCATION OF ALL UNDERGROUND GAS. CABLE AND OTHER UTILITIES. AND SHALL ALSO NOTIFY REPRESENTATIVES OF ALL OVERHEAD AND UNDERGROUND UTILITIES LOCATED IN THE VICINITY OF THE WORK.

   THE CONTRACTOR SHALL ASSUME RESPONSIBILITY FOR PROTECTION OF ALL EXISTING UTILITIES DURING CONSTRUCTION. THE CONTRACTOR SHALL VERIFY THE EXISTING DEPTHS AND HORIZONTAL LOCATIONS OF ALL EXISTING UTILITIES BY PRE-EXCAVATING ALL CONFLICTS BEFORE ANY WORK IS STARTED. THE EXACT LOCATION OF EXISTING UTILITIES SHALL BE DETERMINED BY HAND-DIGGING. ALL UTILITIES DAMAGED DURING CONSTRUCTION SHALL BE REPAIRED WITH MATERIAL ACCEPTABLE TO THE UTILITY OWNER. ALL COST FOR LOCATING. PRE-EXCAVATING. REMOVING. AND REPLACING OR RELOCATING THESE UTILITIES SHALL BE INCLUDED IN THE COST OF THE IMPROVEMENT.

   NO ADDITIONAL COMPENSATION WILL BE PAID TO THE CONTRACTOR FOR ANY DELAY OR INCONVENIENCE DUE TO MATERIAL SHORTAGES OR REASONABLE DELAYS DUE TO THE OPERATIONS OF OTHER CONTRACTORS. UTILITY COMPANIES. OR ANY PUBLIC AUTHORITY DOING THE WORK INDICATED OR SHOWN ON THE PLANS OR IN THE PROPOSAL. OR FOR ANY REASONABLE DELAY OF CONSTRUCTION DUE TO THE ENCOUNTERING OF EXISTING UTILITIES THAT MAY OR MAY NOT BE SHOWN ON THE PLANS.
6. THE CONTRACTOR SHALL HAVE AVAILABLE AT ALL TIMES A COMPETENT SUPERINTENDENT OR FOREMAN AUTHORIZED TO ACT FOR THE CONTRACTOR. AS HIS AGENT ON THE WORK. WHO THOROUGHLY UNDERSTANDS THE PLANS AND SPECIFICATIONS AND WHO SHALL RECEIVE INSTRUCTIONS FROM THE ENGINEER. THE SUPERINTENDENT OR FOREMAN SHALL BE DESIGNATED BY NAME PRIOR TO COMMENCEMENT OF THE WORK AND SHALL BE AVAILABLE AS REQUIRED FOR PROPERTY MANAGEMENT OF THE PROJECT FOR THE DURATION OF THE CONTRACT. PLANS AND SPECIFICATIONS SHALL BE AVAILABLE ON THE PROJECT AT ALL TIMES.
7. WHEN THE ENGINEER REQUIRES THE CITY OF TROY TO PERFORM EMERGENCY WORK. WITH OR WITHOUT NOTIFICATIONS TO THE CONTRACTOR OR SURETY. THE CONTRACTOR WILL BE CHARGED EQUIPMENT RENTAL RATES AS LISTED IN THE CURRENT EDITION OF "RENTAL RATES FOR CONSTRUCTION EQUIPMENT" PREPARED BY ASSOCIATED EQUIPMENT DISTRIBUTOR. AND LABOR AT THE CURRENT HOURLY RATE PER MAN. HOUR. THE TIME CHARGED TO THE CONTRACTOR SHALL BE FROM THE TIME THE MAN AND EQUIPMENT LEAVE THE CITY OF TROY YARD TO THE TIME THAT IT RETURNS TO THE CITY OF TROY YARD.

   THE CONTRACTOR SHALL PAY FOR ALL INSPECTION OVER EIGHT (8) HOURS PER DAY AND ALL INSPECTION ON SATURDAY AT THE CURRENT HOURLY RATE. PER MAN HOUR. THE CONTRACTOR WILL NOT BE CHARGED FOR OVERTIME ON SATURDAY IF HE HAS FIVE (5) MEN OR LESS PERFORMING CLEAN-UP WORK AND LANDSCAPE ITEMS. IN ADDITION. IF HOLIDAY OR SUNDAY WORK IS PERMITTED BY THE CITY. THE CONTRACTOR SHALL PAY FOR ALL INSPECTION AT THE CURRENT HOLIDAY RATE PER HOUR. PER MAN.
8. THE CONTRACTOR SHALL BE REPSONSIBLE FOR COMPLETE RESTORATION OF THIS PROJECT TO CONDITIONS THAT ARE ACCEPTABLE TO THE JURISDICTIONAL AUTHORITY. ENGINEER AND/OR OWNER.

   DRIVEWAYS SHALL BE RESTORED IN KIND WITH THE FOLLOWING MINIMUM MATERIAL THICKNESS. SIX (6) INCHES CONCRETE. FOUR (4) INCHES ASPHALT ON SIX (6) INCHES AGGREGATE OR EIGHT (8) INCHES OF AGGREGATE. (ALL DRIVEWAY CUT REMOVALS SHALL BE SAWCUT).

   ALL DISTURBED LAWN AREAS SHALL BE SODDED WITH CLASS "A" SOD ON FOUR (4) INCHES OF TOPSOIL. ALL OTHER NON-RESIDENTIAL FIELD AREAS SHALL BE SEEDED. FERTILIZED AND MULCHED ON THREE (3) INCHES OF TOPSOIL (SEE SPECIFICATIONS).
9. THE TRENCH BACKFILL FOR WATER MAINS SHALL CONFORM TO THE STANDARDS AND SPECIFICATIONS AS SHOWN ON THE ATTACHED "STANDARD WATER DETAIL" SHEET. (ALL TRENCH BACKFILL FOR PROPOSED WATER MAINS SHALL BE INCLUDED IN THE COST OF THE WATER MAIN).
10. THE TRENCH BACKFILL FOR SANITARY SEWERS AND STORM SEWERS SHALL BE AS SHOWN BELOW.

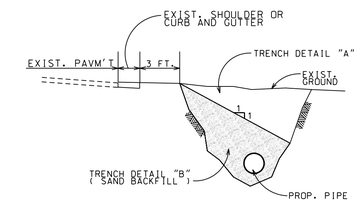

SECTIONAL VIEW

TRENCH DETAIL "A" - SHALL BE BACKFILLED IN 12 INCH LAYERS AND COMPACTED TO 90% OF ITS MAXIMUM UNIT WEIGHT.

TRENCH DETAIL "B" - SHALL BE SAND BACKFILLED IN 12 INCH LAYERS AND COMPACTED TO 95% OF ITS MAXIMUM UNIT WEIGHT.

11. ALL TREES. SHRUBS. LANDSCAPING. MAILBOXES. FENCES. DRIVEWAYS. SIDEWALKS. CULVERTS. STORM SEWERS. DITCHES. GUARD RAILS. SPRINKLER SYSTEMS. SIGNS. YARD OR SIGN LIGHTINGS. UTILITIES AND OTHER EXISTING ITEMS ALONG THE PATH OF THE PROPOSED WATER MAIN AND/OR SANITARY SEWER SHALL BE PROTECTED AND/OR RESTORED AS DESCRIBED IN THE SPECIFICATION BOOK (INCLUDED IN THE COST OF THE IMPROVEMENT).

    ALL EXISTING MAILBOXES ON THE PROJECT WILL BE TEMPORARILY RESET ALONG THE OWNER'S DRIVEWAY. OR ALONG AN INTERSECTING STREET. BEYOND THE LIMITS OF CONSTRUCTION. AS DIRECTED BY THE ENGINEER. WHEN THE PROJECT IS COMPLETED THE MAILBOXES SHALL BE RESET BY THE CONTRACTOR IN ACCORDANCE WITH LOCAL POSTAL REGULATIONS. THE TEMPORARY RESETTING AND FINAL PLACEMENT OF MAILBOXES SHALL BE INCLUDED IN THE PROJECT AND WILL NOT BE PAID FOR SEPARATELY.
12. THE CONTRACTOR SHALL NOT EXPAND UPON THE WORK OR DEVIATE FROM THE LOCATIONS. ELEVATIONS OR SPECIFICATIONS OF ANY WORK AS SHOWN ON THESE PLANS WITHOUT RECEIVING PRIOR APPROVAL FROM THE CITY OF TROY ENGINEERING DEPARTMENT AND/OR OTHER JURISDICTIONAL AUTHORITIES

    IN ADDITION TO THE NOTES ON THIS SHEET. THE CONTRACTOR'S ATTENTION SHALL BE DIRECTED TO THE NOTES ON THE ATTACHED "STANDARD DETAIL" SHEETS AS WELL AS ADDITIONAL CONSTRUCTION REQUIREMENTS.

CITY OF TROY

OAKLAND COUNTY, MICHIGAN

STANDARD SOIL EROSION & GENERAL CONSTRUCTION (1 OF 1)

ENGINEERING DEPARTMENT

APPROVED BY : _____ DATE : _____
STEVEN J. VANDETTE. CITY ENGINEER

REVISIONS	DATE	REMARKS

PROJECT NO.		SHEET NO.
DATE JUNE 2007		
DRAWN BY G.S.F./M.P.B.	CHECKED BY J.E.L.	

STATE OF MICHIGAN
STEVEN J. VANDETTE
ENGINEER NO. 28197
LICENSED PROFESSIONAL ENGINEER

STEVEN J. VANDETTE. P.E. 28197